Physical Evaluation of Active inductances Controlled in GaAs MESFET Technology

Mohammed Salah Benbouza, Nadjim Merabtine

Physical laboratory of electronic and electrotechnology, University of Batna, Algeria
Electromagnetism and telecommunication laboratory Electronics department, University of Constantine, Algeria
benb5506@yahoo.fr na_merabtine@hotmail.com

Abstract:
Two new structures of active inductance which implement MESFET transistors are proposed in this article. The technological parameters of the components "inductances" are those of 0.8µm MESFET technology. We will expose the advantages of these new structures such as the adjustable character of the value of the active inductance like their limitation and we will compare them to those of the literature.

***Keywords**: Active Inductance, GaAs MESFET, Quality Factor. Silicon Bipolar Technology, RF applications*

1. Introduction

The studies of RF inductances are justified by the keen demand of the applications in telecommunication such as filtering in continuous time, the controlled oscillators and decoupling. This basic element of analogical electronics is thus essential.

Integrated passive inductances are limited by their low quality coefficient [1], the reproducibility of their values and the great silicon surface necessary to their synthesis for the RF applications whose frequency is a few gigahertz. It is moreover to note, that this problem of size involves an additional difficulty of characterization of the couplings existing between the various tracks which constitute the inductance. Some techniques were introduced to palliate or to lessen the impact of these defects [2, 3]. These improvements are obtained with the detriment of the facility of design and require a high number of used metal layers, and also lead to the inductance modelling.

The wire bonding was also explored in order to synthesize a passive inductance [4]. However, this option does not present a strong integration and poses also the problem of the reproducibility of the inductance value. It thus remains held for certain applications.

For a few years, another approach has known a renewal of attention on behalf of the analogicians originators: the "active inductance". This revival is mainly due to better performances of the transistors which result from the technological improvements of the integrated circuits manufacturing processes. In addition to the adjustable aspect of the active inductance, we can note the possibility of obtaining good quality factors (Q>5), a broader frequency range, as well as the independence between the inductance value and the circuit size.

As we will point out, achievements were presented in GaAs technology for the high frequencies; others were presented in silicon bipolar technology for RF applications in the frequency band around the Giga-hertz. We will propose two new GaAs MESFET structures and will compare their characteristics to the other MESFET and bipolar structures of the literature.

2. Active inductances in GaAs technology

The first active inductances elaborated in the frequency band of the Giga-hertz, were in GaAs technology. Figure 1 represents the basic topology presented by Hara and its characteristics according to the frequency [5]:

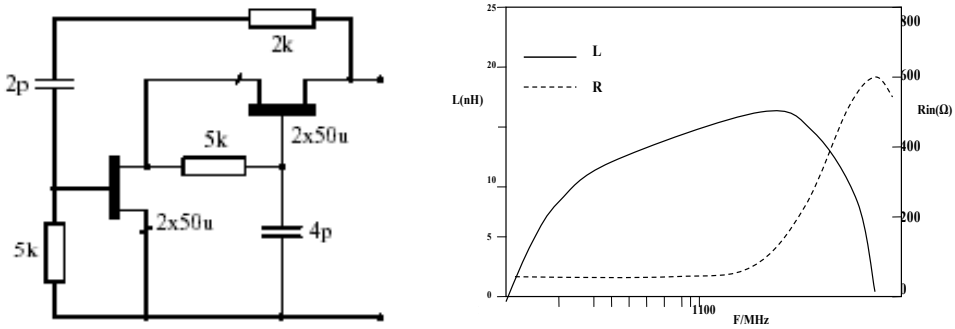

Figure 1. Basic topology of the active inductance [5].

This configuration implements MESFET transistors. It has an inductance in the order of 13 nH and a series resistance about the hundred ohms at 1Ghz frequency. The approximated expressions of the inductance and series resistance synthesized are given by:

$$L \approx \frac{Cgs\,\mathrm{Re}\,xt}{g_m} \tag{1}$$

$$R \approx \frac{1}{g_m} \tag{2}$$

where Cgs is the gate-source capacity of the MESFET component and g_m its transconductance and Rext is the negative feedback resistance connected between the drain of the input transistor and the gate of the second transistor. The transistors are supposed to be identical. Occupied surface borders 400 * 500 µm ². Improvements were then made to this structure in order to reduce the value of series resistance. Thus figure 2 represents an evolution of the circuit of figure 1, transistors in feedback called "Cascade FET feedback active inductor", [6]. By means of a control voltage Vc , inductance is adjustable from 2 nH to 3 nH. This structure has a 8 Ω series resistance of and a quality coefficient of 5 at 1 GHz frequency.

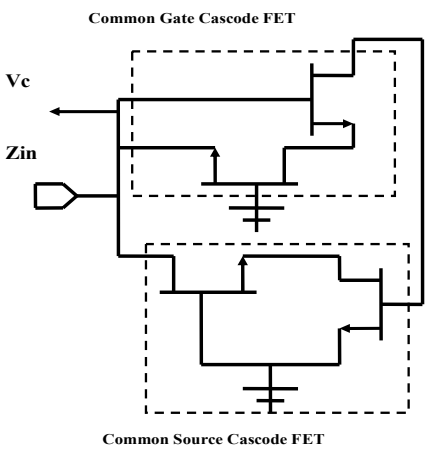

Figure 2. The circuit "Cascade FET feedback active inductor"

Finally we present the Zhang configuration [7], which is made up of three transistors of MESFET type (fig. 3).

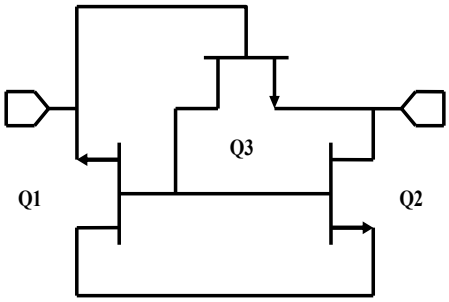

Figure 3. Circuit of the active inductance presented by Zhang [7]

In a similar way, via a control voltage provided by the polarization, the value L of inductance can vary around 7 n H and a series resistance R around 5 Ω at 1 GHz frequency. The values of L and R are given by:

$$L \approx \frac{Cgs}{g_m g_{m3}}\left(2+\frac{1}{2}\left(\frac{f}{f_T}\right)^2\right) \tag{3}$$

$$R \approx \left(gm3\left(1-\frac{1}{f/f_T}\right)\right)^{-1} \tag{4}$$

where f_T is the transition frequency of the transistors, g_m the transconductance of the transistor 1 or 2 and g_{m3} the transconductance of the transistor 3. The maximum frequency of use extends up to 8 GHz.

3. Active inductances in silicon bipolar technology

3.1 Generalities

The surface occupied by the integrated circuits in bipolar technology is important because of many passive elements (inductance, capacity and resistance) and active of polarization.

The various studies undertaken on the active inductances conceived starting from transistors of the bipolar type showed that their quality coefficient is proportional to the transistors parameters according to the formula (5):

$$Q \propto \frac{g_m}{g_{out}} \tag{5}$$

where g_{out} is the output conductance of the transistor and g_m its transconductance.

The bipolar transistor thus presents interesting possibilities for the synthesis of active inductances taking into account its strong transconductance compared to MESFETs. Moreover, in the frequential range near to the giga-hertz, the inductances values used are more important than those met at the higher frequencies. The output transconductance of the bipolar transistor contributes then to the necessary increase in the inductance value.

Moreover, other advantages result from it:

- The advantage over the transconductance will lead to a less power consumption.
- The size of the bipolar transistors being lower, the saving in space compared to the

GaAs configurations is interesting.

- Silicon BiCMOS technology used to carry out active inductance opens the possibility of integration of analogical and numerical functions. Their various circuits which we will consider in bipolar technology are those of an inductance connected to the ground.

3.2 R. Kaunisto Model [8].

The circuit presented by R. Kaunisto **[8]**, uses a configuration with two NPN transistors given by figure 4.

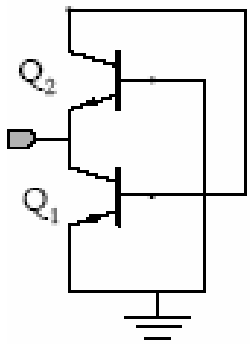

Figure 4. Electric diagram of the active inductance [8].

By using the HF2CMOS technology parameters, the AC simulations of this structure reveal an average inductance of about 3.5 n H and a resistance of approximately 1 Ω with a notable reduction in the value of the series resistance from 850 MHz (figure 5).

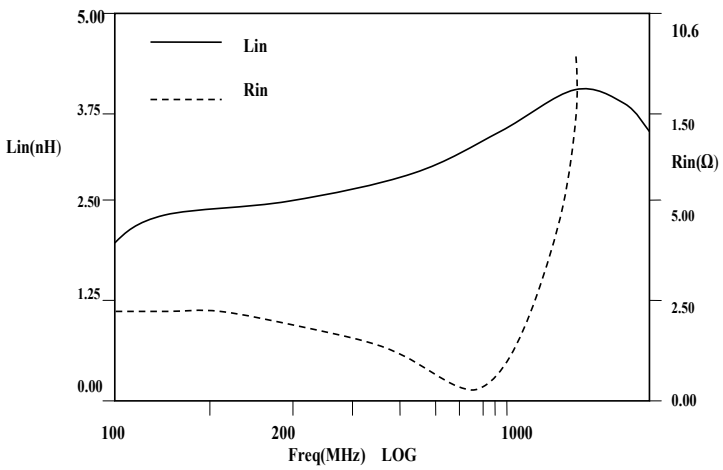

Figure 5. AC Simulation of the active inductance and the associated series resistance

The best quality factor is then obtained at the frequency for which the series resistance is minimal; Q is worth 20 at a 1 GHz frequency.

4 Proposed models

We propose in this part of the study two MESFET based models for the determination of active inductances.

4.1. The first suggested inductance.

The first structure that we propose comprises two N type MESFET transistors whose transition frequency is of the order of 9 GHz under the used polarization conditions. Its small signal equivalent electric diagram is represented on figure 6.

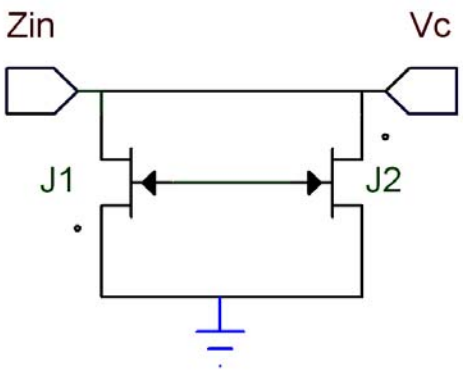

Figure 6. Electric diagram of the first suggested active inductance.

The AC simulations (fig. 7 ,8 and 9) of this configuration leads to 1 GHz with an adjustable inductance of about 7 nH and a resistance series of about 2 Ω. The obtained inductance is proportional to the MESFET parameters.

This dependence clarifies the adjustable character of the inductance by the means of the polarization current. Indeed, the intrinsic parameters of the model such as Cgs, Cds, Cdg and gm depend on the transistors polarization current [9].

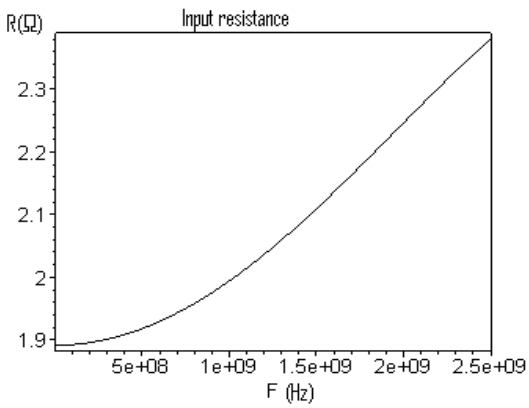

Figure 7. AC simulation of the series resistance associated with the inductance

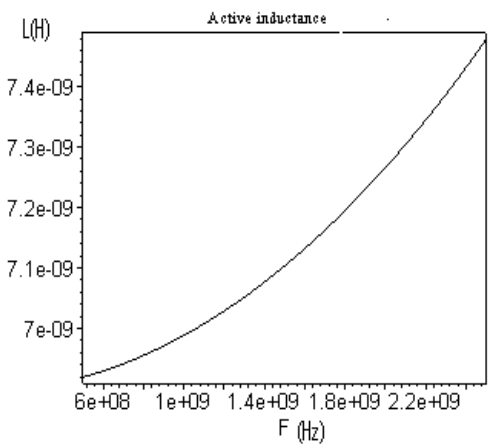

Figure 8. Frequency variation of the inductance

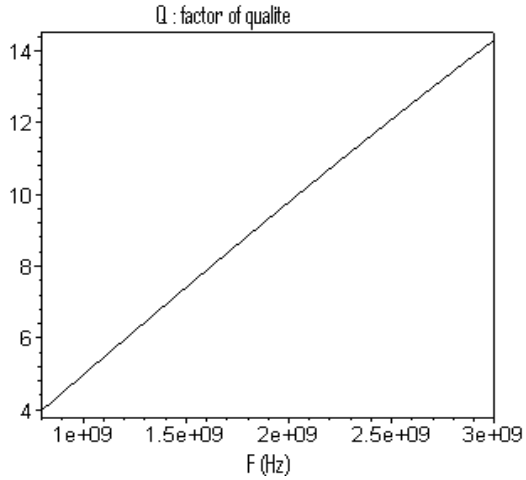

Figure 9. Frequency variation of the value of the inductance quality coefficient

Compared to the performances of the circuit in the figure 6, this structure must be modified in order to reduce the ohmic losses and to increase the quality factor.

4.2. The second suggested inductance.

The second suggested structure is represented on figure 10, in order to reduce series resistance. This circuit adopts a configuration with three N type MESFET transistors ($f_T \sim 9$ GHz). The simulations (fig 11, 12 and 13) show that this circuit satisfies our criteria; the value of the variable inductance obtained is about 12,5 n H and the series resistance remains lower than 1,3 Ω at 1 GHz frequency.

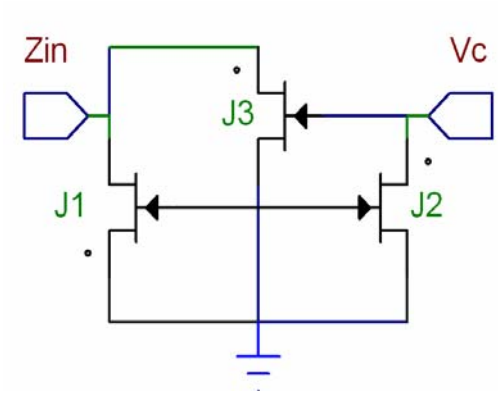

Figure 10. Electric diagram of the second suggested active inductance

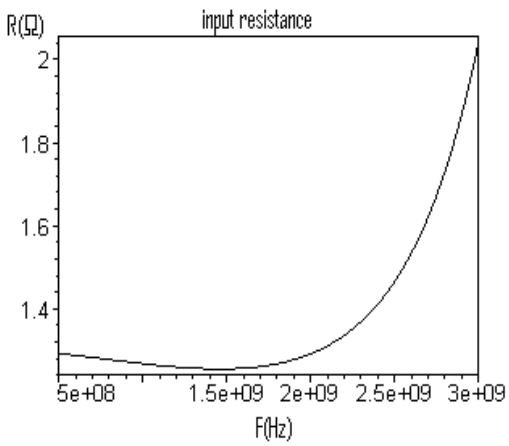

Figure 11. AC simulation of the circuit inductance

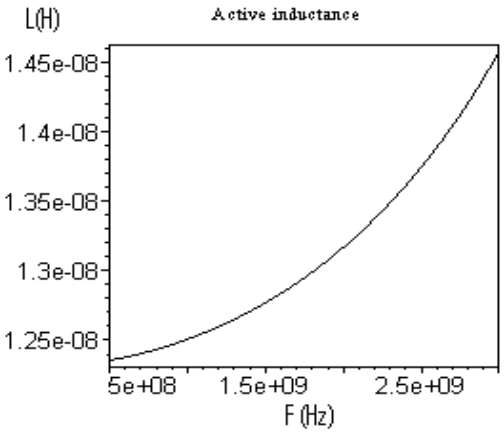

Figure 12. AC simulation of the series resistance associated with the inductance

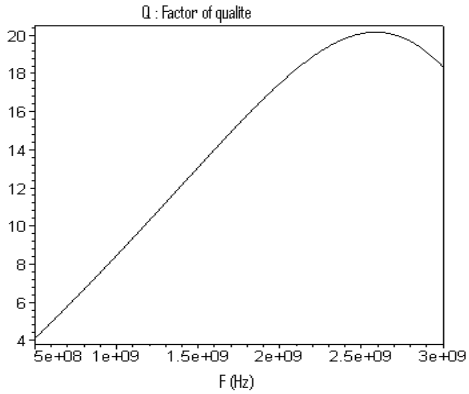

Figure 13. Frequency variation of the quality coefficient value

4.3 Conclusion and comparison between the two configurations.

It should be noted for the configurations of figures 2,3,4,6 and 10 that the polarization conditions are determining to obtain a good quality factor. These polarization conditions can also be sources of instabilities which result from the influence of polarization on the series resistance of the inductance; however, the series resistance can indeed become negative under certain conditions.

	Circuit Figure 2	***Circuit Figure 3***	***Circuit Figure 4***	***Circuit Figure 6***	***Circuit Figure 10***
L (nH)	2	6	3,5	7	12,5
R (Ω)	8	5	1	2	1,3
Q	5	-	20	5	8
Consumption (mW)	-	-	-	10	20

Table 1: Comparison of the various presented configurations

Table 1 illustrates well the evolution of the inductance L and the resistance R between the topology of figures 2,3,4,6 et10 from a value and power consumption point of view.

The circuit of figure 10 is the one that shows the best characteristics. It proposes moreover, a value of the inductance higher than the circuit of the figure 6 configuration for a less power consumption. This inductance value and that of the associated series resistance are adapted to the RF applications of the filtering type and oscillators at a 1GHz frequency.

References

1. Burghartz J.N, Edelstein D.C., Soyuer M., Ainspan H.A. and Jenkins K.A., RF Circuit Design Aspects off Spiral Inductors one Silicon, IEEE Newspaper off Solid-State Circuits, December 1998, volume 33, no.12, pp 621-658.
2. Yue C.P. and Wong S.S., Spiral One-Chip Inductors with Patterned Ground Shields for If-Based RF IC' S, IEEE Newspaper off Solid-State Circuits, May 1998,volume 33, no.5, pp 750-812.
3. Burghartz J.N., Soyuer Mr., Ainspan H.A. and Jenkins K.A., Integrated RF and Microwave Components in BiCMOS Technology, IEEE Transactions one Devices Electron, September 1996, volume 43, no.9, pp 1045-1567.
4. Svelto F., Deantoni S. and Castello C., A 1.3 GHz Low-Phase Noise Fully Tunable CMOS LLC VCO, IEEE Newspaper off Solid-State Circuits, March 2000, volume 35, no.3, pp 1135-1152.
5. Hara S., Tokumitsu T., Aikawa M., Lossless broad-band monolithic microwave activates inductors, IEEE Transactions one Microwave Theory and Techniques, December 1989, Volume 37 , pp 12-34.
6. Hara S., Tokumitsu T., Tanaka T., Aikawa M., Broad-band monolithic microwave activates inductor and its application to miniaturized wide-band amplifiers, IEEE Transactions one Microwave Theory and Techniques, December 1988, Volume 36, pp 1920-1924.
7. Zhang G.F., Villegas M. L., Ripoll C.S. and Gautier J.L., New Broadband Tunable Monolithic Microwave Floating Activate Inductor, Electronics Letters, January 1992, volume 28, no.1, pp 456-481.
8. Kaunisto R., Alinikula P. and Stadius K., Activate Inductors for GaAs and Bipolar Technologies, AICSP, 1995, volume 7, pp 151-221.
9. Tiallet-Guy B., Ouarche Z., Prigent M., Quere R. and Obregon J., Direct Extraction of a Distributed Nonlinear Fet Model from Pulsed , IEEE Microwave and Guided Wave Letters, February 1998, volume 8, no.2, pp57-69.

Article received: 2006-11-10